6TAGM

MILITARY-GRADE VRLA BATTERY

MIL-PRF-32143C compliant (TAF-certified third-party tested)

PERFORMANCE STANDARD
MIL-PRF -32143C
COMPLIANT
THIRD-PARTY TESTED
TAF-ACCREDITED LABORATORY



PILOT ENERGY

PILOT ENERGY | Document Rev.: Ver 1.0
US CAGE Code SLTD7

PRODUCT OVERVIEW



Product Positioning

Engineered to meet the rigorous requirements of the MIL-PRF-32143C standard, the 6TAGM is a premium 12 V valve-regulated lead-acid (VRLA) battery designed for extreme tactical and heavy-duty applications. At its core lies an advanced microstructural framework, featuring nano-crystal seeded positive plates and conductive carbon-enhanced negative plates, combined with high-performance Absorbed Glass Mat (AGM) technology. By integrating a gravity-cast, high-temperature, deep-cycle specialized alloy with precise external formation processing, this battery delivers strong cranking power, excellent deep-cycle endurance, and high energy density. Completely maintenance-free, certified non-spillable, and factory pre-charged, the 6TAGM delivers dependable performance and readiness in harsh environments.

KEY FEATURES

- **Advanced Electrochemical Architecture** — Nano-crystal seeded positive plates paired with carbon-enhanced negative plates support high dynamic charge acceptance (DCA), strong deep-cycle resilience, and low self-discharge.

- **Superior Energy Reserve** — Rated at 120 Ah (C20 rate) at 12 V nominal, providing robust and sustained energy delivery.

- **Tactical-Grade Power Delivery** — Delivers 1,100 A (SAE) cold cranking current and a 240-minute reserve capacity for mission-critical operations.

- **Extended Logistical Readiness** — Engineered for long shelf life, retaining charge for up to 24–30 months without recharging at ≤20 °C, supporting rapid deployment.

- **Maintenance-Free Design** — Certified non-spillable and precision-formed via external formation, arriving fully charged and ready for out-of-the-box installation.

DIMENSIONS & CONSTRUCTION

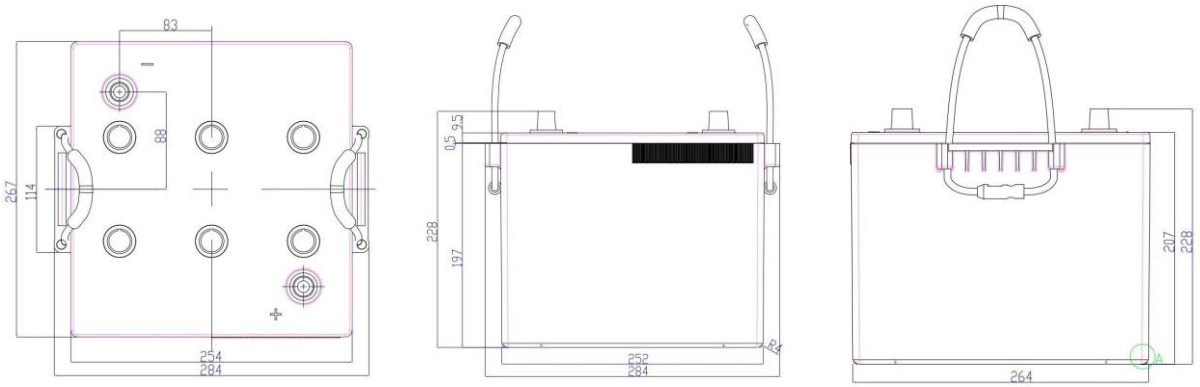

TOP VIEW FRONT VIEW SIDE VIEW

Dimensions and Weight

Item	Specification
Length × Width × Height	284 × 267 × 228 mm (length incl. handles; case body 254 mm; height to top of terminals)
Weight	40.8 kg (90 lb) maximum
Terminal type	Top-mounted SAE posts per MIL-PRF-32143C
Case	Gray flame-retardant container, UL94 V-2

Construction

Each 6TAGM unit is carefully assembled using high-purity electrolyte, heavy-duty AGM separators, and advanced engineered plates, all housed within a ruggedized, secure container fitted with heavy-duty terminals. Every battery undergoes multi-point quality assurance testing for acid leakage, structural deformation, and surface defects, in line with the physical and environmental requirements of MIL-PRF-32143C.

TECHNICAL SPECIFICATIONS

CATEGORY	PARAMETER	SPECIFICATION
General Parameters	Model	6TAGM
	Technology	AGM VRLA (nano-crystal seeded positive & conductive carbon-enhanced negative)
	Alloy specification	Gravity-cast, high-temperature, deep-cycle specialized alloy
Electrical Performance	Nominal voltage	12 V
	Rated capacity	120 Ah (C20) / 110 Ah (C10) / 100 Ah (C5) / 80 Ah (C1)
	Cold cranking amps (CCA)	1,100 A (SAE)
	Reserve capacity	240 min
	Internal resistance	1.8 mΩ ± 0.3 mΩ
Charging & Operational	Operating temperature	-40 °C to +80 °C
	Charging voltage	14.4 V ± 0.1 V (constant potential); float charge 13.74 V @ 20 °C
Cycle Life & Durability	Cycle life @ 20% DoD	3,500 cycles
	Cycle life @ 50% DoD	1,650 cycles
	Cycle life @ 80% DoD	680 cycles
	Shelf life (≤ 20 °C)	24–30 months max. (storage without recharge)
Compliance & Standards	Standards & certifications	MIL-PRF-32143C compliant (TAF-certified third-party tested)

Values are nominal unless otherwise specified. Specifications are subject to change without prior notice.

PERFORMANCE DATA

Minimum Performance Values

Category	Parameter / Condition	Specification / Value
Tactical Performance	Nominal voltage	12 V
	Constant-potential charge	14.4 V
	Internal resistance	1.8 mΩ ± 0.3 mΩ
	Weight (maximum)	40.8 kg
Capacity & Endurance	Full-charge capacity (@ 20-hour rate)	120 Ah (6.0 A)
	Reserve capacity (baseline)	240 min
	Rated capacity (C10 / C5 / C1)	110 / 100 / 80 Ah
High-Rate Cranking	High-current discharge (to 7.2 V @ -18 °C)	1,100 A for 30 s
	Arctic cranking (to 7.2 V @ -40 °C)	400 A for 30 s
Harsh Environment	Reserve capacity (post 90-day storage @ 40 °C)	200 min
	Reserve capacity (post-vibration testing)	219 min

Thermal Tolerances

Condition	Temperature range
Discharging	-40 °C to +80 °C
Charging	-20 °C to +40 °C
Storage	-15 °C to +40 °C

Logistical Readiness

Ambient storage	Max. period
≤ 20 °C	24–30 months
≤ 30 °C	12–15 months
≤ 40 °C	6 months

All performance values are measured on fully charged battery units in accordance with MIL-PRF-32143C test methods.

APPLICATIONS

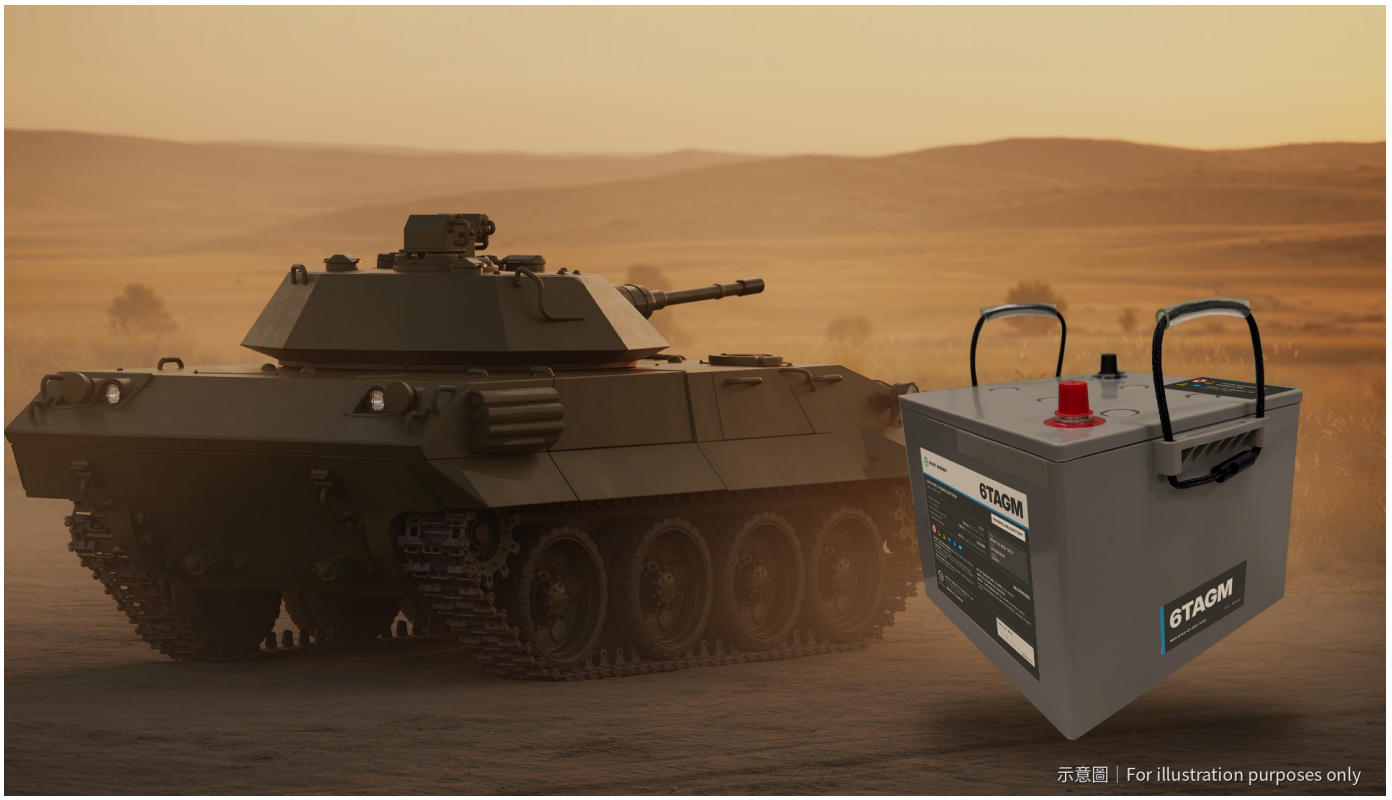

Target Applications & Mission Profiles

- **Military Mobility:** Primary cranking power for tactical, armored, and diverse military platforms operating in extreme environments.
- **Mission-Critical Systems:** Sustained, deep-cycle energy supply for extended Silent Watch operations and heavy-duty on-board communications equipment.
- **Heavy Industry:** High-rate, reliable ignition for heavy construction machinery and industrial standby generators.

SAFETY, STORAGE & HANDLING

Operational Safety & Handling

Manual Handling: Weighing approximately 40.8 kg (90 lb), the 6TAGM requires a strictly mandated two-person lift utilizing the integrated handles; lifting via terminal straps is strictly prohibited. **Electrolyte Hazard:** As the electrolyte utilizes sulfuric acid, handling compromised units mandates approved acid-resistant PPE, followed by immediate neutralization and washing of the containment area. **Overheating Response:** In the event of thermal anomalies—such as casing melt, swelling, or extreme heat—terminate charging protocols immediately and allow the unit to cool for several hours to mitigate explosion risks.

Logistical Storage Criteria

Temperature Range: Maintain ambient storage temperatures between -15 °C and +40 °C. The advanced electrochemical architecture permits an extended shelf life of 24–30 months without a refresh charge when stored at or below 20 °C (reduced to 6 months at 35 °C to 40 °C). **Ventilation:** Battery enclosures must maintain active or passive external ventilation and must never be hermetically sealed.

Charging Protocols & Maintenance

Charging Environment: Charging must be conducted in well-ventilated environments to prevent hydrogen gas accumulation and ignition risk, with permissible operational temperatures spanning -20 °C to +40 °C. **Charger Compatibility:** Pre-verify charger output voltage parameters; legacy fixed-voltage chargers are generally incompatible with AGM technology. **Strict Prohibitions:** Never connect batteries of differing chemistries, capacities, or lot numbers in series; never exceed three parallel strings; and never bridge mixed battery technologies (e.g., flooded 6TMF alongside AGM units) on a single charging bus.

Deployment & Transport Guidelines

Wiring Sequence: Always engage positive (+) terminals first during installation, and consistently decouple negative (−) terminals first during disconnection. **Insulation:** When deploying within metal chassis, interpose a heat- and acid-resistant insulating barrier/tray, or utilize an unsealed insulating sleeve. All insulating materials must be fundamentally grease-free and free of leaching organic compounds. Strictly isolate the battery from plasticized vinyl tapes, solvents, and lubricants. **Freight Markings:** Shipping enclosures must prominently feature “Handle with Care,” “Do Not Invert,” “Do Not Stack Heavy Loads,” and directional “UP ↑” indicators.

CONTACT

PILOT ENERGY

Company: Pilot Energy Co., Ltd.
Address: No. 2, Ziqiang Road, Su'ao Township, Yilan County, Taiwan (R.O.C.)
Tel: +886-3-990-1059
Fax: +886-3-990-2683
Website: www.pilotbattery.com.tw